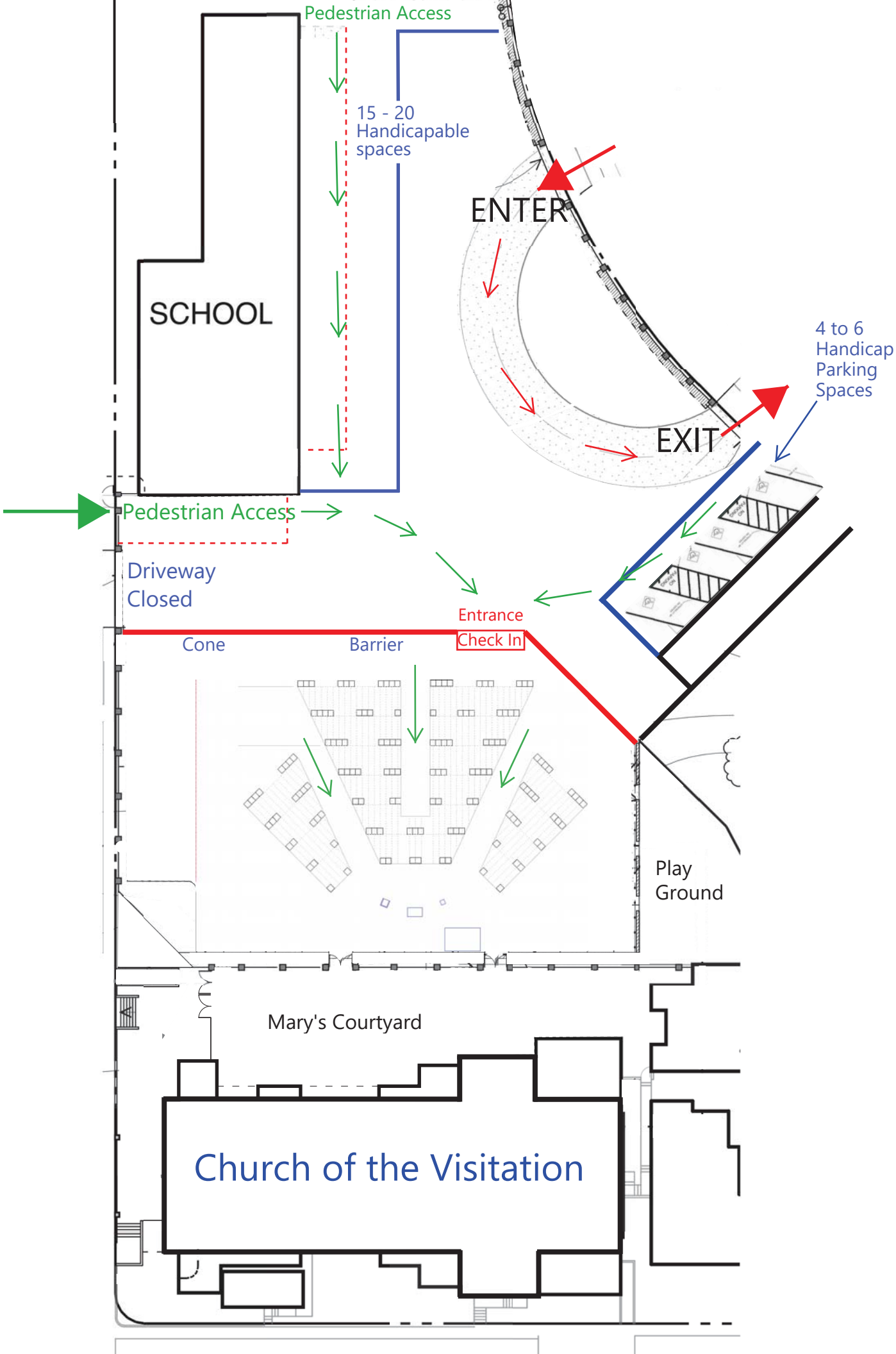
Pedestrian Access
15 - 20
Handicapable
spaces
ENTER
SCHOOL
4 to 6
Handicap
Parking
Spaces
EXIT
Pedestrian Access
Driveway
Closed
Entrance
Check In
Cone
Barrier
Play
Ground
Mary's Courtyard
Church of the Visitation

Proposed Seating Layout

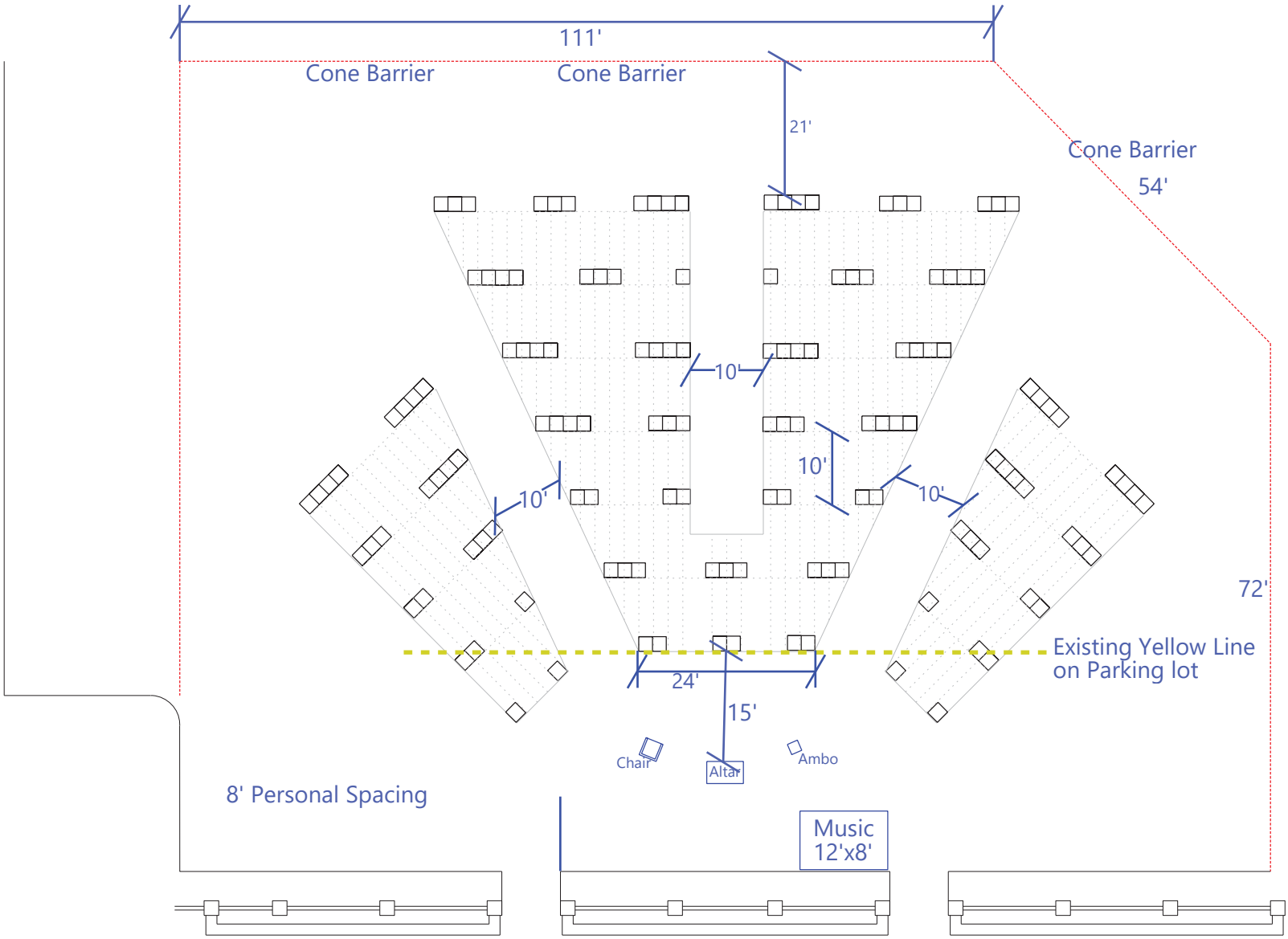

Mary's Courtyard